Chimney fan RSHG

Chimney fan RSHG

An **exodraft** chimney fan RSHG is specially designed to work with heating appliances burning gas.
The fans have a built-in fail-safe system consisting of a pressure differential switch and a flow measuring system.
The fail-safe system complies with BS5440: 2000 Part 1 and BS6644: 1991.

RSHG fans have a horizontal discharge and can withstand temperatures up to 200 °C at the chimney top.

The RSHG fans guarantee optimum draught irrespective of the placement, dimensions or height of the chimney which is beneficial to new or existing installations.

The fan must be connected to an **exodraft** control type EFC21.

Technical data

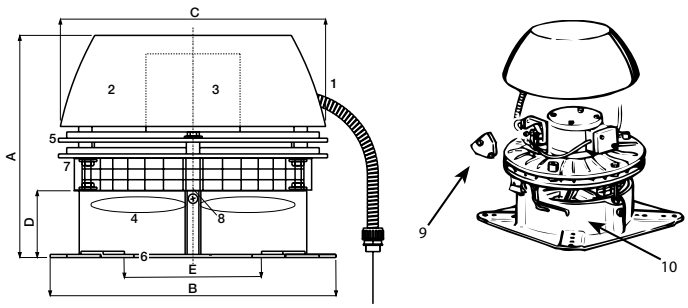

1. Motor cable
2. Motor housing
3. Motor
4. Vane
5. Ribbed cooling platew
6. Base plate
7. Hinges
8. Locking nut
9. Pressure Differential Switch
10. Flowmeasurer

	Motor specifications				Weight	Dimensions				
Model	RPM	V	Amp	kW*	kg	A mm	BxB mm	C ø/mm	D mm	E ø/mm
RSHG012-4-1	1400	1x230	0,4	0,03	14	275	365	350	85	165
RSHG014-4-1	1400	1x230	0,4	0,04	18	330	420	395	100	188

*Max effect at the motor shaft at ambient temperature: 20°C
RPM is infinitely adjustable for all 1x230 V motors. • The motor is overload protected • Motor protection class IP 54, Insulation class F
Connection cord 120 cm, 6 core, 0.75 mm^2.

exodraft a/s
C. F. Tietgens Boulevard 41
5220 Odense SØ
Denmark

www.exodraft.com

exodraft

Capacity diagrams

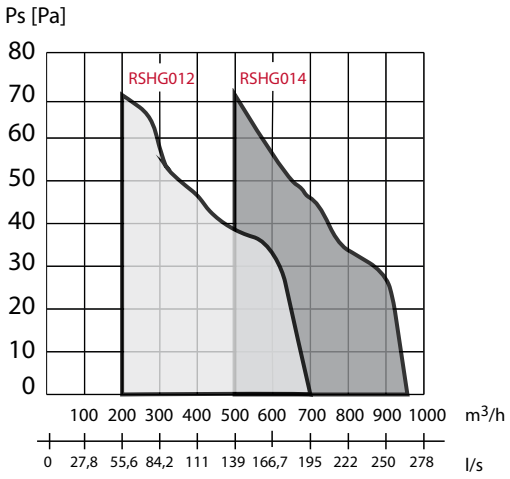

Type	Test flue diameters
RSHG012	Ø 200 mm
RSHG014	Ø 250 mm
	at 1400 rpm

The capacity chart is measured at a flue gas temperature of 20 °C. The fan capacity changes with temperature.
Correction of system pressure loss for flue gas temperature higher than 20 °C is calculated:

$$Ps_{20} = Ps_t \times \left(\frac{273 + t\,(°C)}{293}\right)$$

t = temperature measured in °C

Example
System need: 500 m³/h and 90 Pa at 180 °C
Selection of fan: 500 m³/h and 139 Pa at 20 °C

Sound data

Sound levels to external surroundings (ISO 3744)								
Model	Lw (dB)							Lp dB (A)
	125 Hz	250 Hz	500 Hz	1000 Hz	2000 Hz	4000 Hz	8000 Hz	
RSHG012-4-1	64	60	55	52	48	42	34	30
RSHG014-4-1	75	69	65	62	57	51	44	41

Sound levels to flue pipe (ISO 5136)									
Model	Lw (dB)							Lw dB(A)	Lp dB (A)
	125 Hz	250 Hz	500 Hz	1000 Hz	2000 Hz	4000 Hz	8000 Hz		
RSHG012-4-1	72	65	59	49	47	41	31	61	53
RSHG014-4-1	82	73	63	58	52	48	38	68	61

Tolerance +/-3 dB
Lw = Sound effect level dB. (reference: 1 pW)
Lp = Sound Pressure level dB (A) at a distance of 10 m from the fan at half-spheric sound distribution.
Lp = (5 metres) = Lp (10 metres) + 6dB
Lp = (20 metres) = Lp (10 metres) - 6dB

exodraft a/s
C. F. Tietgens Boulevard 41
5220 Odense SØ
Denmark

www.exodraft.com